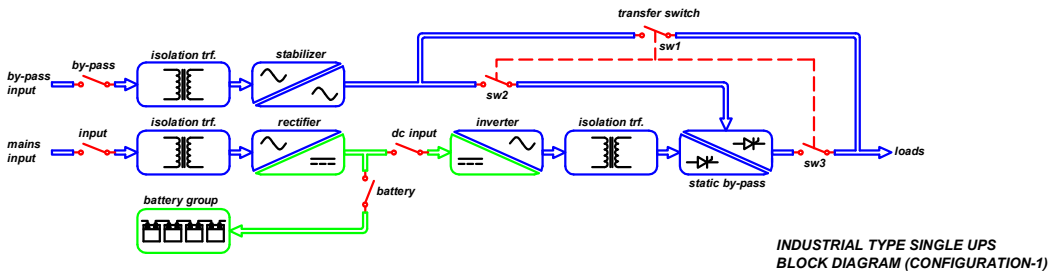

INDUSTRIAL TYPE SINGLE UPS
BLOCK DIAGRAM (CONFIGURATION-1)

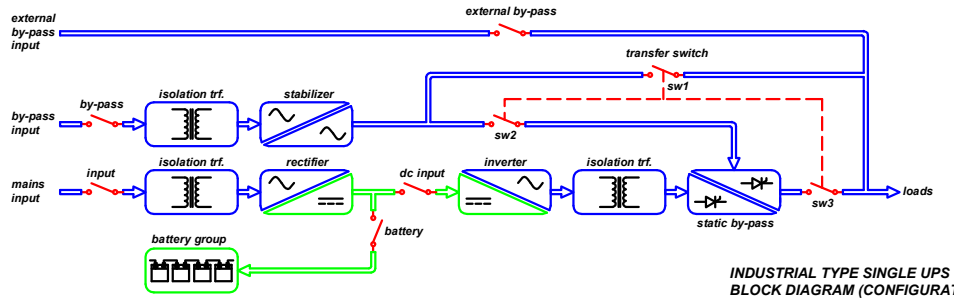

INDUSTRIAL TYPE SINGLE UPS
BLOCK DIAGRAM (CONFIGURATION-4)

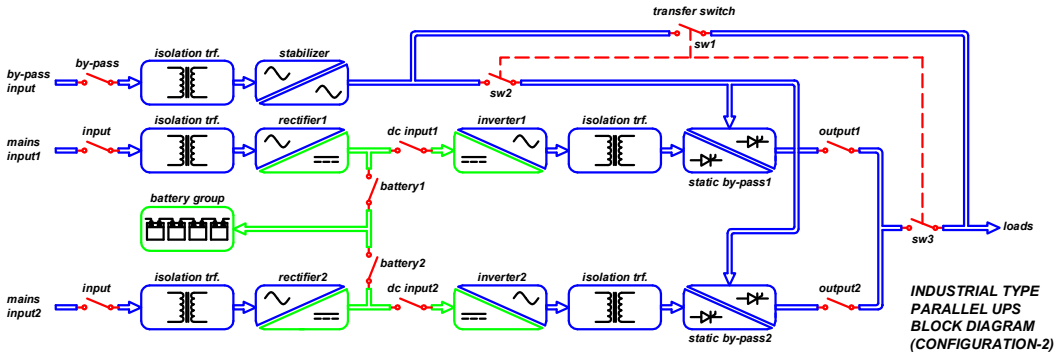

INDUSTRIAL TYPE
PARALLEL UPS
BLOCK DIAGRAM
(CONFIGURATION-2)

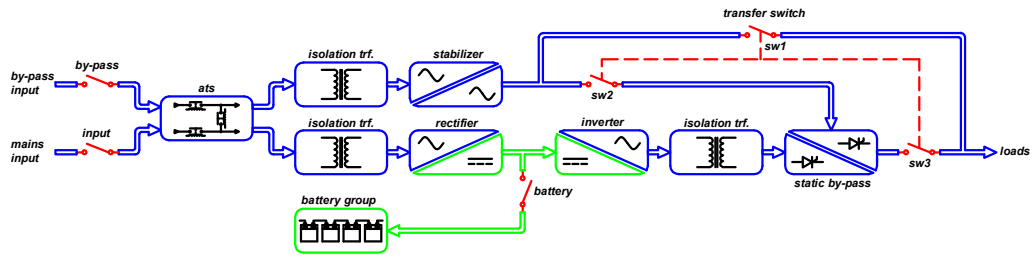

INDUSTRIAL TYPE SINGLE UPS
BLOCK DIAGRAM (CONFIGURATION-5)

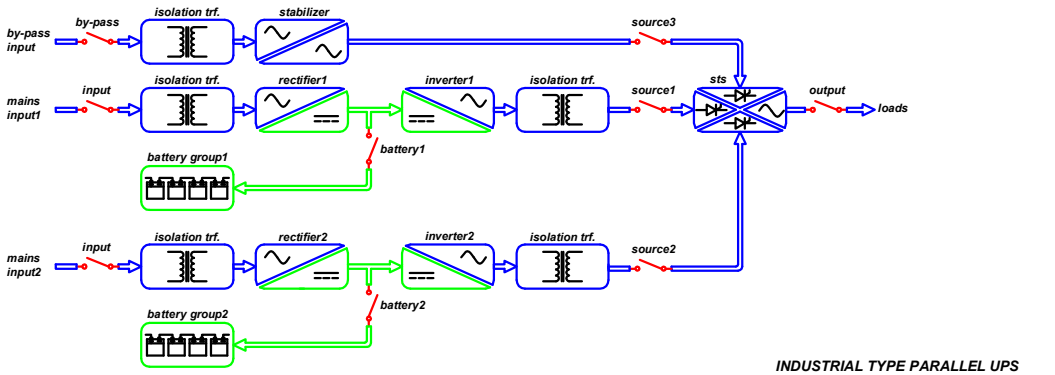

INDUSTRIAL TYPE PARALLEL UPS
BLOCK DIAGRAM (CONFIGURATION-3)

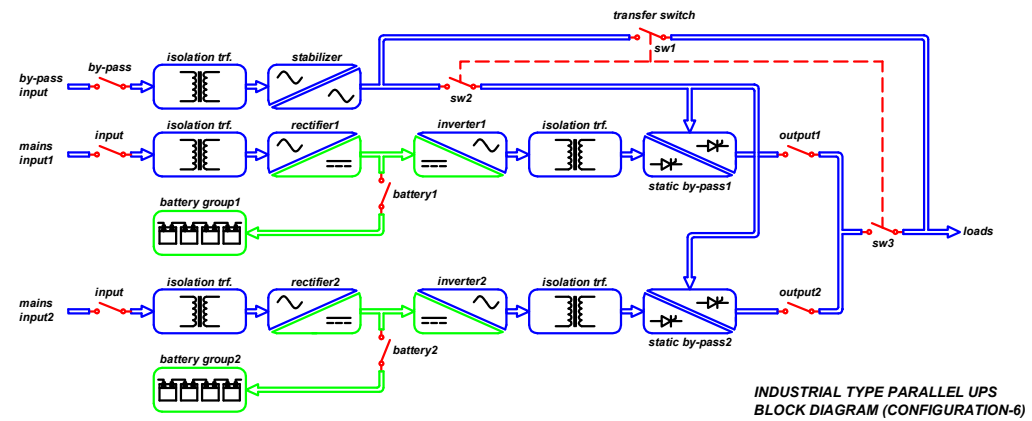

INDUSTRIAL TYPE PARALLEL UPS
BLOCK DIAGRAM (CONFIGURATION-6)